SMART FARMING SYSTEM USING ARDUINO AND WIRELESS SENSOR NETWORK

[1]Ragul P, [2]Palaniappan S, [3]Mohan Prasad,[4]Sujatha R

[1]Student, [2]Student, [3]Student, [4]Assistant Professor
[1]Computer Science And Engineering,
[1]Sri Krishna College of Technology, Coimbatore. India

Abstract : Smart agriculture is an emerging concept, because IOT sensors are capable of providing information about agriculture fields and then act upon based on the user input. In this Paper, it is proposed to develop a Smart agriculture System that uses advantages of cutting edge technologies such as Arduino, IOT and Wireless Sensor Network. The paper aims at making use of evolving technology i.e. IOT and smart agriculture using automation. Monitoring environmental conditions is the major factor to improve yield of the efficient crops. The feature of this paper includes development of a system which can monitor temperature, humidity, moisture and even the movement of animals which may destroy the crops in agricultural field through sensors using Arduino board and in case of any discrepancy send a SMS notification as well as a notification on the application developed for the same to the farmer's smartphone using Wi-Fi/3G/4G.

***IndexTerms* - IoT, WIFI, Arduino, Temperature Sensor, GSM**

I. INTRODUCTION

India has agriculture as its primary occupation. According to IBEF (India Brand Equity Foundation), 58% of the people living in rural areas in India are dependent on agriculture. As per the Central Statistics Office 2nd advised estimate, the contribution of agriculture to the Gross Value Addition (India) is estimated to be roughly around 8% which is very significant contribution. Under such a scenario, the usage of water especially the fresh water resource by agriculture will be enormous and according to the current market surveys it is estimated that agriculture uses 85% of available freshwater resources worldwide, and this percentage will continue to be dominant because of population growth and increased food demand. This calls for planning and strategies to use water sensibly by utilizing the advancements in science and technology. There are many systems to achieve water savings in various crops, from basic ones to more technologically advanced ones. One of the existing systems use thermal imaging to monitor the plant water status and irrigation scheduling. Automation of irrigation systems is also possible by measuring the water level in the soil and control actuators to irrigate as and when needed instead of predefining the irrigation schedule, thus saving and hence utilizing the water in a more sensible manner.

The emerging global water crisis: In addition to managing scarcity and conflict between water users, the available fresh water is further contaminated by the human and animal population and the pollution levels have increased at an alarming rate. This if continues, will be leading to limitation of food production which in turn will affect the human productivity and thus the entire ecosystem will be affected in the years to come. The primary and the most important reason for this problem is the tremendous increase in the population which has increased at a rate which is faster than the food production rate. This population growth especially in water short countries will directly have an impact on its growth on the world map. The food production needs to be increased by at least 50% for the projected population growth. Agriculture accounts for 85% of freshwater consumption globally. This leads to the water availability problem and thus calls for a sincere effort in sustainable water usage. In this paper, a smart and intelligent agriculture system which can help the farmer to utilize the water level sensibly and also take care of other discrepancy factors like unrequired animal entry into the fields are discussed. The system consists of a microcontroller and sensors like moisture, temperature, humidity, motion, pH level, color sensor. The system uses both wired and wireless connections for the communication between the sensors, microcontroller and the internet. Smart Agriculture System is proposed in this paper which will use concept of IOT, WSN and cloud computing to help farmer plan an irrigation schedule for his farm through a agriculture profile which can be edited as per his/her requirements. Based on the users input an automated irrigation system is developed to optimize water use for agricultural crops. The system has a distributed wireless network for soil- moisture and temperature sensors placed in the root zone of the plants.

Proper scheduling of irrigation and fertilization is very important for proper development of crops.The color sensor is used to capture the image of the leaf and identify whether the plant is affected for disease or not. The pH level sensor is used to know the pH level value of the soil then suggest the farmer to which crops are provide good result for this soil. The several factors which affect the amount of water required by crops in various climatic conditions are:Temperature,Humidity,Sunshine,Wind speed ,Passive infrared sensor and Seed monitoring.

The collected and sensed climatic data from field along with weather data from web repositories can be used to take several effective decisions for increasing production of crops. If environmental condition is hot, dry, sunny, windy then there is need of high amount of water for crops and if these factors are like cold, humid, cloudy, little wind then the need of water is less for the crops. Previous study model abstracted a system that consist of six parts that are monitoring, management, planning, Information Distribution, decision support and control action. The above study model does data analysis for better decision support [1]. In [2], a GSM based smart agriculture system was proposed for doing automation of several agriculture tasks. Automation is proposed by smart irrigator that moves on mechanical bridge slider arrangement. The smart irrigator receives signal from smart farm sensing system through GSM module. The sensed data is transferred towards central database from which all crop details are

analyzed and transferred to irrigator system to perform automatic actions. IOT based smart Agriculture [3] gives information about irrigation and has services like smart control and making intelligent decision depending upon real time data from fields. All these operations will be controlled through any smart device placed remotely and the interfacing sensors are used to perform operations along with Wi-Fi, actuators and other hardware devices. The entire system was established using infield sensors which collects data from farm and using GPS data is sent to the base station where necessary actions are determined to control irrigation according to database available with the system. Researcher's measure soil related parameters such as humidity and moisture as important factors for the growth of any crop. Auto mode and Manual mode are the two modes of operation of the system. System takes its own decisions and controls the installed devices and user can control the operations of system using android app or commands in auto and manual mode respectively. Internet of Things is proven to be a cost effective and reliable technology to implement smart systems [5]. In smart village system advance rural connectivity is enabled through web service and measuring different environmental factors in real time.

The work proposed in [6] provides the use of IOT in almost all phases like growing, harvesting, packaging, transportation. Real time data provided by sensors, RFID tags in all the above phases of cultivation of crop will help farmers and all the stake holders to have complete view of the product right from the production to sales. Automated agriculture system proposed in [7] finds the moisture values from the moisture sensor and turn the motor in the green house ON or OFF based on moisture level and actuators are used to control the motor. Automated system definitely helps farmer in increasing the yield of crops. Paper [8] produces an agricultural model in IOT environment which is human centric. It incorporates IOT and cloud computing universally to remove the inadequacy and lack of management, which are the root of problems in agriculture.

II. PROPOSED SYSTEM

The development of a smart agriculture system using sensors, microcontroller within an IOT system is presented. The aim of the implementation is to demonstrate the smart and intelligent capabilities of the microcontroller to allow the decisions to be taken on watering the plants based on the continuous monitoring of the environmental conditions in the field. The system is as shown in Fig. 1. It also aims at a predefined irrigation schedule as per the farmer's convenience, uploaded into the application developed for the same. These sensors continuously monitor the parameters and send it to the Arduino board for further processing which acts as an IOT gateway. This gateway has been given the wireless capability by installing a WiFi module which will be updating the data to the cloud. The IOT gateway also has the GSM capability through the module connected.

The data being uploaded to the cloud allows the user to continuously view the parameters from the comforts of his/her home or wherever on the go. The system has the capacity to adapt based on the user input which the farmer can input through the smart agriculture application. The farmer can select a profile based on the season and the crop for irrigation and schedule and plan the water resource utilization sensibly as shown in Fig. 2. The volumetric water content in the soil is a primary factor which gives a suggestion that the water is required for the crops. In the absence of this system the farmer has to manually inspect these for all the crops by inspecting the soil in the fields which is tedious, time consuming and straining. This can be taken care by the intelligent system which informs the user whenever the water content goes below the threshold set by the farmer himself.

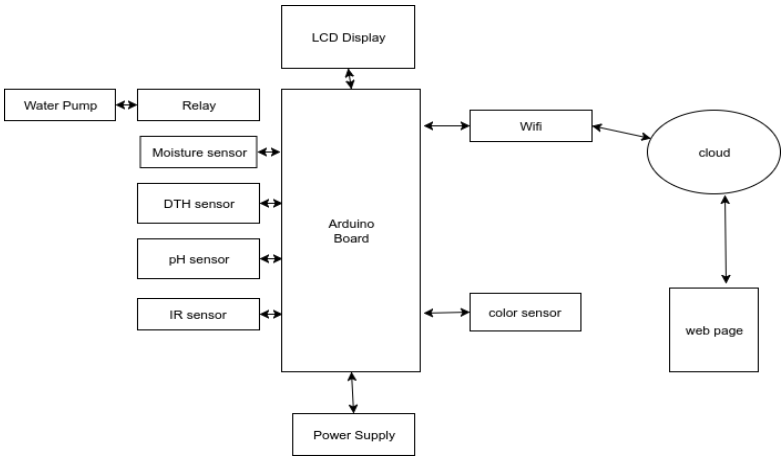

Fig 1. Hardware block diagram

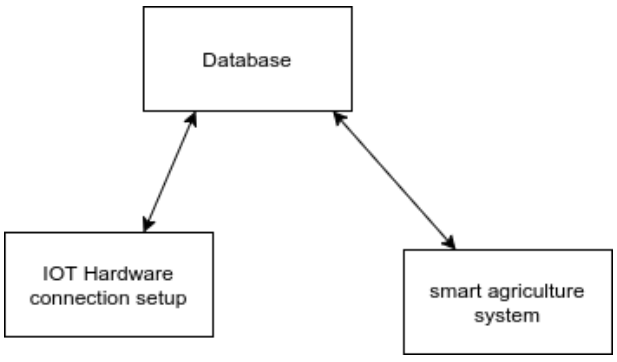

Fig 2 Hardware setup.

.

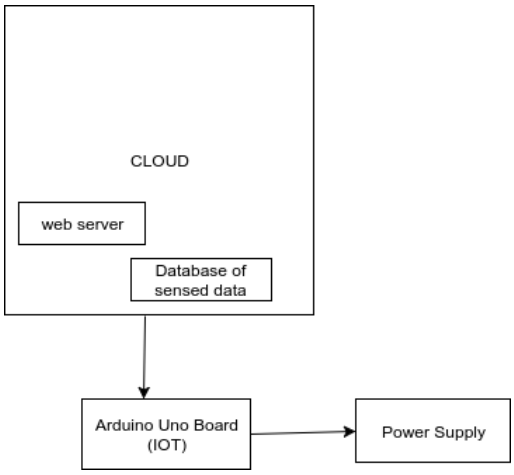

Fig 3. IOT Implementation.

Intrusion of animals especially cows, monkeys, dogs etc to the fields is a very common issue and one of the factors for disruption or disturbance to the yield. This requires one person to continuously guard the fields at all the times which will not be accurate and the productivity of one person is wasted. This can be overcome by this system which has a motion sensor to detect the presence of any animal in the fields and send notifications to the farmer in their presence. The distance range for which the farmer needs to detect the animals can be allowed to set by the farmer himself in the application in the beginning.

III. SYSTEM IMPLEMENTATION

The system architecture consists of a Arduino Uno R3 microcontroller board, sensors like LM 35 temperature sensor, humidity, moisture and motion sensor, PH sensor , colour sensor ,a Wi-Fi module i.e. ESP8266 and a GSM module as shown in Fig. 3. The software consists of a web page which includes setting up of the profile for predefined irrigation based on the seasons or on daily and weekly mode. The software has also been programmed to send a notification to the farmer whenever the physical parameters sensed the animal present. The Arduino Uno board controls all the activities taking place on board and acts as the IoT gateway. Sensors sense all the physical parameters and convert the analogue value to digital value. Temperature and humidity sensors are used to measure the temperature and humidity respectively on field. Soil Moisture Sensor are of capacitive type, and are used to measure the moisture of the soil. The color sensor is used to capture the image of the leaf and identify wheather the plant is affected for disease or not. The pH level sensor is used to know the pH level value of the soil then suggest the farmer to which crops are provide good result for this soil. The yield of crops is affected by the speed with which the wind blows also.

This is also measured in our developed system. For capturing data in real time from the sensors, a RTC module is also incorporated. This data is then transmitted to the IOT gateway. The IOT gateway then transmits the data to the cloud using the Wi-Fi module. The cloud in our system will include a Web Server, a database and decision logic. The database will maintain the data received from the IOT gateway. For example, in the developed system a threshold for temperature is kept at 25 C. whenever the temperature goes above the threshold temperature, the motor pump automatically turn ON. Otherwise the motor pump was turned OFF. If the animals are crossed the IR sensor ,then the farmer will also get notified by a SMS to his registered mobile phone.

IV. IMPLEMENTATION

IOT based smart agriculture system is used to generate decisions regarding irrigation using real time data. System is implemented in three phases, they are Sensing ,Processing and Information distribution. The sensing phase involves the sensing of the physical parameters which includes temperature, moisture, humidity, motion, color and Soil pH level. All these sensors are attached to the Arduino Uno R3 microcontroller board. This board acts as the IOT gateway in the developed system as it has the capacity to transmit the data to the cloud. This transmission is done using Wi-Fi ESP8266 module. The processing phase takes place in the cloud. The cloud consists of a Web Server, a database where the sensed data is maintained and a decision logic which takes decisions based on the sensed data. The end-to-end algorithm of the smart farming system is given below

Start

- *Continuously acquire sensor data*
- *A/D conversion of the sensed data on the Arduino Board*
- *Send the data to the cloud through the IOT Gateway*
- *If the data is above the threshold*
- *Send a message to the farmer's mobile*
- *Endif*
- *Else*
- *Continue checking for the threshold condition*
- *Endif*

End

The features that are provided are as follows

1.Send message whether to turn ON/OFF the water pump
2.Selection of an irrigation profile i.e. the farmer can choose a time on a particular day to start the irrigation and a time to stop the irrigation. This facilitates the farmer to invest his time in some other productive work. This also allows the farmer to select the same schedule for a week or a month
3.Suggestion to the farmer to use a particular pesticide for their crop
4.Notify the farmer on the invasion of the field by animals.

V. CONCLUSION.

IOT based smart agriculture system can prove to be very helpful for farmers since over as well as less irrigation is not good for agriculture. Get values for climatic conditions like humidity, temperature, moisture can be fixed based on the environmental conditions of that particular region. The system also senses the invasion of animals which is a primary reason for reduction in crops. This system generate irrigation schedule based on the sensed real time data from field. The color sensor is used to capture the image of the leaf and identify wheather the plant is affected for disease or not. The PH sensor is used to know the PH value of the soil then suggest the farmer to which crops are provide good result for this soil. This system can recommend farmer whether or not, is there a need for irrigation. Continuous internet connectivity is required. This can be overcome by extending the system to send suggestion via SMS to the farmer directly on his mobile using GSM module instead of mobile app.

References

[1] Abdullah Na, William Isaac, "Developing a human-centric agricultural model in the IOT environment," in 2016 International Conference on Internet of Things and Applications (IOTA) Maharashtra Institute of Technology, Pune, India 22 Jan - 24 Jan, 2016,978-1-5090-0044-9/16, 2016 IEEE.
[2] Chetan Dwarkani M, Ganesh Ram R, Jagannathan S, R. Priyatharshini "Smart agriculture system using sensors for agricultural task au-tomation," in 2015 IEEE International Conference on Technological Innovations in ICT for Agriculture and Rural Development (TIAR 2015).
[3] Jeetendra Shenoy, Yogesh Pingle "IOT in agriculture," 978-9-3805-4421-, IEEE. 2016
[4] Narayut Putjaika, Sasimanee Phusae, Anupong Chen-Im, Phond Phun-chongharn and Khajonpong Akkarajit Sakul, "A control system in intelli-gent agriculture by using arduino technology," in Fifth ICT International Student Project Conference(ICT-ISPC), 2016.
[5] Nikesh Gondchwar, R. S. Kawitkar, "IOT based smart agriculture," International journal Of Advanced research in computer and Commu-nication Engineering (IJARCCE), vol. 5, no. 6, Jun. 2016.
[6] Rajalakshmi P and S. Devi Mahalakshmi, IOT Based Crop-Field Mon-itoring and Irrigation Automation
[7] Sinung Suakanto, Ventje J. L. Engel, Maclaurin Hutagalung, Dina Angela, "Sensor networks data acquisition and task management for decision support of smart agriculture," in 2016 International Conference on Information Technology Systems and Innovation (ICITSI) Bandung – Bali, pp. 24–27, Oct. 2016
[8] Syed Mubarak and S. Sujatha "International journal of advance re-search in science and engineering," IJARSE, vol. 4, no. 01, May 2015, ISSN23198354(E).
[9] Tejas Bangera, Akshar Chauhan, Harsh Dedhia, Ritesh Godambe, Manoj Mishra, "IOT based smart village," InternationalJournal of Engineering Trends and Technology (IJETT), vol. 32, no. 6, Feb. 2016, ISSN: 2231-5381