Review Paper Based on Smart Locking System For Illegally Parked Vehicle

Prof. Ms. Swati Pawar[1], Prof. V. D. Ugale[2],
Vishal Pawar[3], Aditya Paithankar[4], Nikhil Palve[5] Electronics and Telecommunication Department,
Sandip Institute of Technology and Research Centre, Nasik

Abstract:

In developing countries like India when a vehicle is parked in a no parking zone, a towing van seizes the vehicle and no information is provided to the owner of the vehicle regarding the measures and there is no guarantee that vehicle will not be damaged during the process. Moreover, in countries where E-Police governance system is not present, the database management of vehicles in the region is a hectic task. To overcome all these issues faced by vehicle owners and authorities in charge a smart locking system can be designed.

Keywords: *Bluetooth, database management, digital payment, GPS, GSM, locking system, parking, portable lock, server, traffic management*

Introduction:

In India, it is observed that, traffic police tow or carry abandoned vehicles without notifying the vehicle owner. Person gets panic when he or she came to know that his or her vehicle is misplaced for a long time. Even towing agent don't give exact information about which authority office the owner should contact to retrieve his vehicle. The other major problem is towing charges which are demanded by the contractor per vehicle which eventually do not benefit government as part of that charges directly goes to contractor's pocket. Generally vehicle owner may not have any issues if vehicle gets tow by the authority but the owner wants a reliable information and easy retrieval of his vehicle. Also damage free vehicle while retrieval is the priority. This project will be an integrated platform for these three types of users such as vehicle owner, traffic police admin and towing contractor. The project is planned to provide a solution to this problem using a portable, automatic locking mechanism, and user interface integrated application and a payment system.

At this current situation a system to organize illegally parked vehicle takes too much time and efforts for normal people and traffic police as well. So to develop an automatic and efficient solution we have developed a system which will include a smart automatic controlled vehicle lock and a smart interface to operate it using our smart phones. The main purpose of this project "Smart Locking System for Illegally Parked Vehicle" is to provide a solution for illegally parked vehicles to be managed in smart way which should be both efficient and faster than the conventional system. To deal with this problem we are introducing a portable, handy, user defined and a smart lock which will be acting as an agent which will help the owner from wear and tear of vehicle on the other hand it will also help the traffic police to get rid from the hectic job.

Review of Literature:

In paper [1] "Design of Sharing Bicycle Smart Lock System Based on Bluetooth and GPRS Communications" the author has implemented the project using microcontroller. In order to satisfy the demand of market especially the cycle sharing industry, a locking system based on Bluetooth low power (BLE) and GPRS communication is designed. The connection with the user's client via Bluetooth and the control of the whole system is realized by the microcontroller CC2541. GPRS communication with the server is realized by SIM800C and GPS positioning module is added. The unlocking methods of scanning two-dimensional code and entering the password are designed in terms of use to protect the normal use of the bike. The charging circuit design is completed to ensure the continuous power supply system using solar charging.

Figure 1: Hardware structure diagram of system [1]

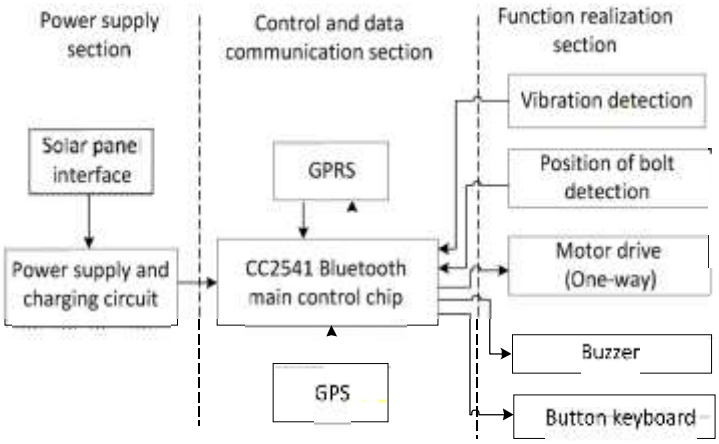

In paper [2] "A Practical Digital Door Lock for Smart Home" the author has implemented the idea using IOT. IOT (Internet of Things) contributes services in various part of human life. This is manifested by the large number of connected devices. With the increasing growth of IOT devices based systems, the security of such system is becoming important. In particular, Smart Door Lock system has its own importance because it majorly contributes in safety of the person and the assets. However, the data sent and received of existing Smart Door Lock system is vulnerable to forgery and hacking. To improve these security factors, the author has proposed a Smart Door Lock system based on block chain. Also, this provides data integrity and non-repetition of the data to prevent passwords from hacking and other malpractices. Author has proposed an algorithm that the Smart Door Lock system analyse doubtful circumstances around itself and operates based on data received from wireless sensor nodes. In paper [3] "Design of Smart Lock System for Doors with Special features Using Bluetooth Technology" the author has designed different algorithms than the conventional ones. Nowadays the use of Internet of Things (IOT) technology has developed that almost all aspects in human's life utilize IOT technology to increase the quality of life. Lock system is one of those inventions that have been contributing to the exponential development of IOT, for example lock system that can be controlled from a distant user or the systems that operates on the passwords accepted from the users from some input devices. The main factor for the security of smart home lays on the security of the door, so the door lock system has to be stable and reliable which eventually contributes massively in overall system. The paper devices a design of locking system for operating the working of door without a controlling action to open or lock it that brings a reduction to human effort and can be applied effectively and comfortably. Besides, the lock system can be used by disabled people or any special people without executing much efforts. The system uses Bluetooth technology consuming low power and is available on every device. The design of the system is also devised with special feature to assure the security and the ease to the users. The lock system supports the program of United Convention of Right People with Disabilities.

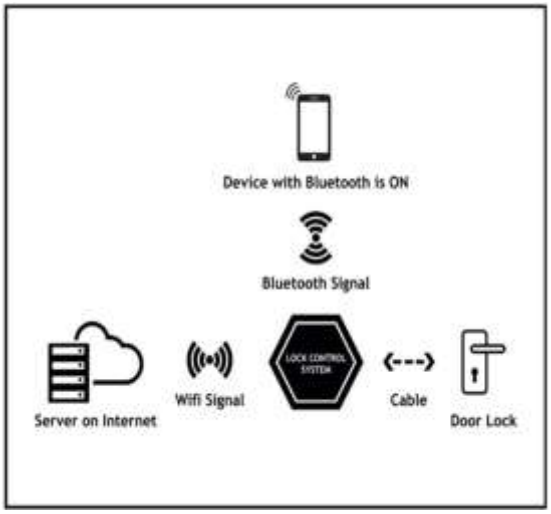

Figure 2: SLS System Architecture [3]

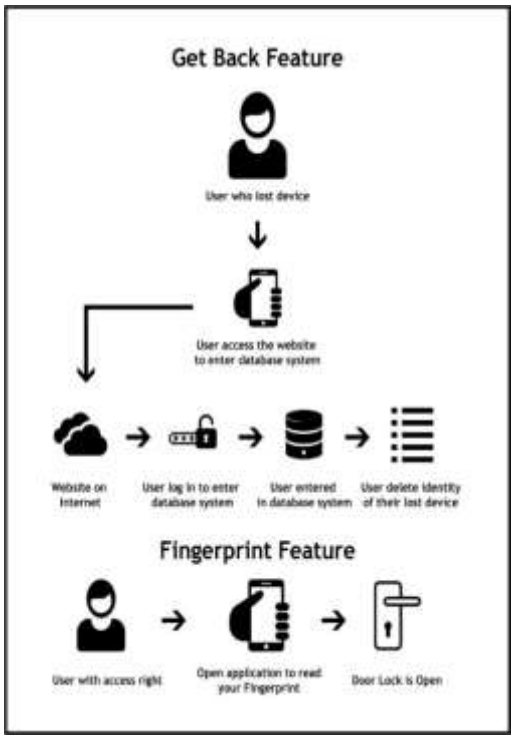

Figure 3: Special Features [3]

In paper [4] "Method and Apparatus for Communicating Information from a Mobile Digital Device to a Barcode Scanner" the author has devised a solution to the cases of bikes getting stolen from parking area or sometimes we forgot to remove the keys from bike by mistake. In these cases, it is really difficult to get the bike back. The author has implemented this project is to solve this problem. Main concept behind this project is of a bike security system using a password based system through keypad. This system turns on the Buzzer when wrong password is entered for 3 times. User can change this password anytime he/she wish using a keypad. This is microcontroller based project which also comprises of GSM technology and Vehicle anti-theft system with vehicle ignition controlling technique. Whenever bike owner removes key from the ignition lock at that instant the system is turned on. Author have provided vibration sensor with this project, which is similar to piezoelectric sensor. When vibrations are detected, SMS is sent to the owner of the bike. When car owner sends back SMS to the system, the engine is stopped. Author have also provided a Relay and a DC motor to show the demo of vehicle engine controlling system. In paper [5] "Two Wheeler Vehicle Security System" the author has proposed a reliable design of 'Two Wheeler Vehicle Security System (TWVSS)' with entities enhancing the security of the vehicle and assuring the safety of the owner. The security system proposed in the paper is strictly for the two wheeler vehicles which includes the features like engine immobilizer, buzzer, allowing user to control the system remotely by SMS, tracking the location of vehicle using GPS technology, 'Remote Keyless System', servo motor operated locking system (handle lock, fuel lock and rear wheel lock) and side stand indicator which also ensures the safety of the rider. Author has implemented this project using Atmega328p-pu microcontroller and a servo motor based mechanism for the locking system. In the implemented system a SMS feature is available which can be enhanced by including the call feature for ease of operation like for example giving miscall would lockdown the vehicle. Moreover a microphone could be interfaced to the GSM module so that during theft activity voice call could be established for enhanced security.

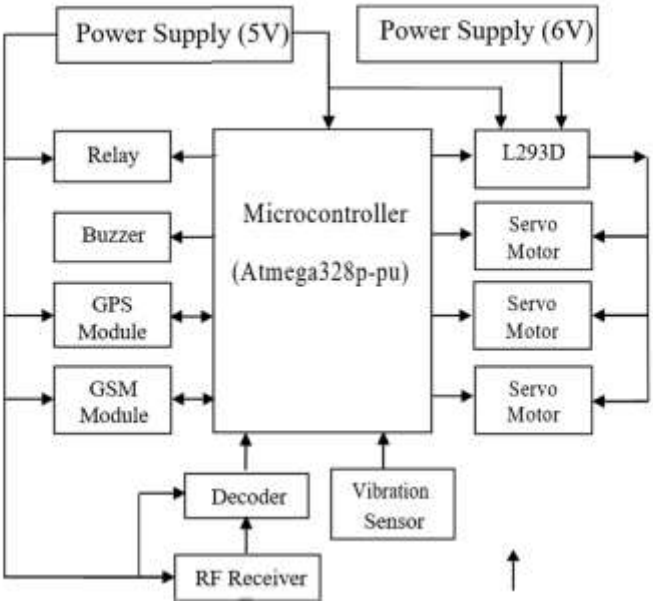

Figure 4: Block diagram of TWVSS hardware module to be installed in the vehicle [5]

Conclusion:

By studying the above papers we can conclude that a reliable management system for illegally parked vehicles can be implemented using a portable smart lock with a dedicated server system. For this system a GSM module connected to the locking mechanism and a microcontroller based locking system in coordination with the server will be sufficient. This will contribute to make an efficient and transparent action system against offensive parking and will also help in managing the data of vehicles corresponding to that particular region.

Reference:

[1] Jiran Chen And Xuedong Jiang, "Design Of Sharing Bicycle Smart Lock System Based On Bluetooth And Gprs Communications"[ISBN: 978-1-60595-477-6, ICVMEE 2017]

[2] Yuan Chih Yu, Member IEEE, "A Practical Digital Door Lock For Smart Home"[978-1-5386-3025-9, ICCE 2018 IEEE]

[3] Muhammad Sabirin Hadis, Elyas Palantei, "Design Of Smart Lock System For Doors With Special features Using Bluetooth Technology"[978-1-5386-0954-5, ICOIAC 2018 IEEE]

[4] Nagesh Challa, Venkata T. Gobburu, "Method And Apparatus For Communicating Information From A Mobile Digital Device To A Barcode Scanner"[US 7,967,211 B2, United States Patent Jun. 28, 2011]

[5] Prashantkumar R., Sagar V. C., Santosh S., Siddharth Nambiar, "Two Wheeler Vehicle Security System"[ISSN: 2231 – 6604,IJESET Dec 2013]